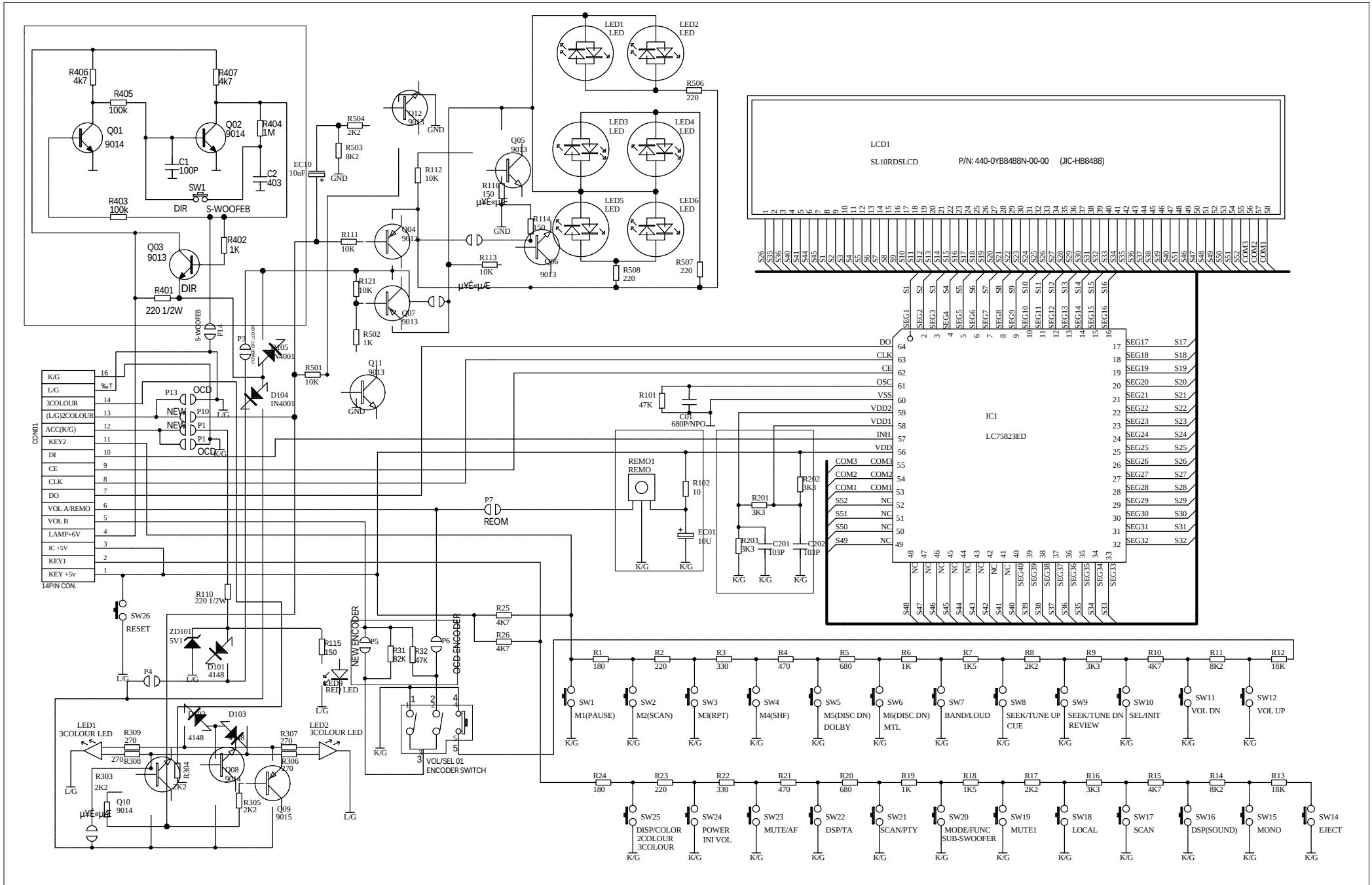

PROLOGY CMD-200